Manuscript ID: 1193
DOI: 10.18462/iir.icr.2019.1193

Thermodynamic analysis and selection of refrigerants for high-temperature heat pumps

José M. CORBERÁN[(a)], Abdelrahman H. HASSAN[(a),(b)], Jorge PAYÁ[(a)]

[(a)] Institute for Energy Engineering, Universitat Politècnica de València, Camino de Vera s/n, Valencia, 46022, Spain, corberan@ter.upv.es

[(b)] Mechanical Power Engineering Department, Faculty of Engineering, Zagazig University, Zagazig, 44519, Egypt, ahassan@iie.upv.es

ABSTRACT

This paper presents an analysis of the performance of high-temperature heat pumps using different refrigerants. A thermodynamic cycle model, considering minimum temperature difference at the heat exchangers pinch point, and reasonable pressure drop and efficiencies, has been developed. The source temperature was fixed at 80 °C, as a reference, while the temperature lift between sink and source was varied from 40 to 80 K to cover a wide range of applications. The selected refrigerants were categorized into three groups, wet, dry, and isentropic, based on the slope of saturated vapor curve on T-s diagram. The results showed that isentropic refrigerants, R-245fa, R-1233zd(E), and Butene, have the highest performance compared to dry and wet refrigerants. R-1233zd(E) is considered to be the most suitable one regarding performance and safety, however it only allows a maximum temperature lift of 73 K. Acetone seems to be a good candidate for higher temperature lifts.

Keywords: High-temperature Heat Pump, Modelling, Refrigerants, COP, Subcooler.

1. INTRODUCTION

To reduce the energy consumption and mitigate the negative impacts on environment, high-temperature heat pumps (HT-HPs) are considered to be an efficient solution. HT-HP is a promising technology that opens the door for several applications, one of the important applications is the industrial waste heat recovery. To imagine, in figures, the significant potential of industrial waste heat, Panayiotou et al. (2017) reported that this sector accounts for 370.41 TWh per year in the European industry. This heat represents a very valuable source, usually available between 40 and 80 °C, which could be reutilized by a HT-HP to produce hot water or steam at a temperature higher than 100 °C (Arpagaus et al., 2018). Another recent application is the compressed heat energy storage (CHEST), in which a HT-HP, driven by renewable energy sources (RES), is used to charge a high-temperature thermal energy storage (HT-TES) system in the periods of low demand; later, the thermal energy stored is discharged, using a heat engine (HE) cycle, to generate electricity during high demand peaks. CHEST system provides better integration of RES in the electricity grid and helps to overcome their intermittency (CHESTER, 2018).

Many authors in the literature have focused on assessing the performance of HT-HPs for different configurations, refrigerants, and values of temperature lift. To select the most suitable refrigerant for a HT-HP with temperature lift of 50 K and condensation temperature up to 150 °C, Reißner (2015) developed a simple idealized heat pump model equipped with an internal heat exchanger (IHX). For subcritical scenarios, the system was simulated for two subcooling (SC) values of 5 K and 35 K inside the condenser. The IHX is used only to improve slightly the coefficient of performance (COP) and generate the necessary superheat (SH) for dry refrigerants. The results showed that the refrigerants with higher critical temperature result to higher values of COP, and the effect of raising the subcooling degree on the system performance significantly depends on the refrigerant type. Finally, Reißner concluded that R-1336mzz(Z) and R-1233zd(E) are the best choices by thermodynamic suitability, with COP up to 6.6 and 6.84, respectively. A similar model was presented by Arpagaus et al. (2018) to compare the thermodynamic efficiency for different refrigerants. The main performance parameters were COP and volumetric heating capacity (VHC). The model's assumptions were: no pressure drop inside heat exchangers, constant isentropic efficiency of 0.7,

fixed SC value inside the condenser of 5 K, and fixed temperature lift of 70 K. They reported that the system performance for hydrofluoroolefins (HFO) refrigerants, R-1234ze(Z), R-1233zd(E), and R-1336mzz(Z), increases compared to R-245fa with condensing temperatures above 100 °C. Regarding the VHCs, R-1234ze(Z), R-600, R-1224yd(Z), R-245fa, and R-1233zd(E) give the most promising VHC values ranging from 2.5 to 3.4 $MJ \cdot m^{-3}$.

Fukuda et al. (2017) presented an exploratory assessment of a HT-HP used for heat recovery applications. The tested refrigerants were R-1234ze(Z), R-1233zd(E) and R-365mfc. They developed two configurations for the HT-HP cycle to raise the temperature of heat media to 160 °C with a waste heat at 80 °C. R-1234ze(Z) has a critical temperature of 150.1 °C, accordingly it was employed for transcritical cycles, such cycles are out of the frame of current paper. Regarding the single-stage with IHX subcritical cycle, the results showed that R-1233zd(E) has the better performance compared with R-365mfc. It has COP and pressure ratio values of 4.18 and 6.36, respectively. Furthermore, they stated that R-1233zd(E) cycle has irreversibility losses lower than R-365mfc by 21.7%.

In the literature, many thermodynamic models used to assess the HT-HPs performance are fundamental and do not consider many practical aspects such as different values of temperature lift, and pinch point and pressure drop inside heat exchangers. Furthermore, using IHX can enhance slightly the COP for some refrigerants, but it is not practical in some applications which require very high values of SC, more than 60 K (e.g. thermal energy storage systems). Also, using a subcritical system could result to a mismatch of temperature profiles inside the condenser, especially for applications that require a very high water-side temperature lift, more than 40 K (e.g. district heating (DH) and industrial applications). This mismatching increases the irreversibility associated with heat transfer through a finite temperature difference. All of these reasons motivated the authors to develop a more practical and flexible HT-HP model for different applications to be able to perform a more accurate comparison between the available refrigerants. The proposed model is equipped with a subcooler, after the condenser, to ensure a better match between refrigerant and secondary fluid temperature profiles. The proposed model considers the pinch point location, especially inside the subcooler, and pressure drop inside the heat exchangers. A range of temperature lift (ΔT_{lift}) values is considered, from 40 to 80 K. The ΔT_{lift} in the current study is defined as the difference between sink and source temperatures. Different refrigerants were analysed and compared to assess the thermodynamic performance of HT-HPs for various applications.

2. HT-HP MODEL DEVELOPMENT

2.1. Model Configurations and Assumptions

Fig. 1 shows the general configurations of the proposed HT-HP model. The proposed configurations are suitable for industrial applications, which require high temperature water (>100 °C) and saturated steam (Config. 1); or thermal energy storage applications, which require pumping the heat from low temperature level to store it in a HT-TES system (Config. 2). Regarding Config. 1, the pressurized water firstly enters the subcooler ($m_{wtr,in,subc}$) to heat it up to the temperature of the high-temperature water tank (HTWT). Then, part of it is directed to the condenser to generate saturated steam ($m_{stm,out,cond}$), and the rest exits the HTWT as saturated liquid water ($m_{wtr,out,HTWT}$).

In Config. 2 the pressurized water enters the subcooler from the low-temperature water tank (LTWT) and is heated up to the temperature of the HTWT in a closed loop. These two tanks represent the sensible heat storage system. As can be noticed that the condenser is replaced by a phase changing material heat storage (PCMHS) system to store the latent heat rejected from the refrigerant during condensation. In the current study, the outlet of refrigerant from the condenser/PCMHS is always assumed to be saturated liquid, and all the process of SC is done inside the subcooler. This leads to better matching and small temperature differences between the refrigerant and water.

These two configurations have been chosen because they allow taking advantage of both the two-phase (latent) and sensible heat exchange of subcritical cycles with a good approach to the corresponding secondary fluid, hence with high COP, see for instance the cycle depicted in Fig. 5.

The proposed model was developed using Engineering Equation Solver (EES) software (Klein, 2018).

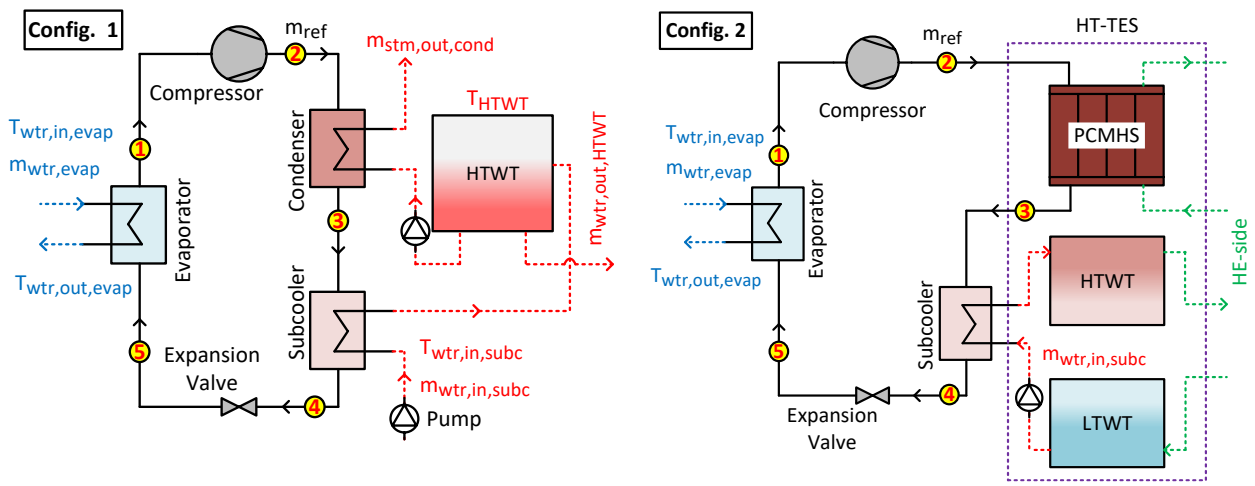

Figure 1: Different configurations for the proposed HT-HP model

The model assumptions are: the system runs under steady state conditions; the compressor has constant isentropic (η_s) efficiency of 0.7; the refrigerant mass flow rate (m_{ref}) is 1 kg·s^{-1}; the pressure drop in evaporator and condenser corresponds to 2 K and 0.5 K drop in the inlet saturation temperature, respectively; and all heat exchangers are counter flow with a fixed temperature difference at the corresponding pinch point (ΔT_{pp}) of 3 K. The main performance parameters to be evaluated are the COP, pressure ratio (Pr), discharge temperature (T_{dschrg}) and VHC. The VHC is the total heating effect per unit of swept volume, which gives an indication for the compressor size and its ability to pump the required thermal power. Table 1 summarizes the main performance parameters for the proposed HT-HP model.

Table 1. Performance parameters used in the present study

Parameter (unit)	Mathematical definition, based on Fig. 1
ΔT_{lift} (K)	$=T_{HTWT}-T_{wtr,in,evap}$
COP (-)	$=[(h_2-h_3)+(h_3-h_4)]/(h_2-h_1)$
Pr (-)	$=P_2/P_1$
T_{dschrg} (°C)	$=T_2$
VHC (MJ·m^{-3})	$=[(h_2-h_3)+(h_3-h_4)]/v_1$

2.2. Selection and Properties of Refrigerants for HT-HPs Applications

Selection of the proper refrigerant is a crucial decision for designing HT-HPs. One important aspect to choose a proper one is the required degree of SH after evaporation. Low SH values could result in wet compression, while high values could decrease the evaporation temperature and affect significantly the system performance. Based on this, the refrigerants could be classified into three groups based on the slope of saturated vapor curve on T-s diagram (dT/ds). The negative slope refrigerants are called “wet fluids”, the positive slope ones are called “dry fluids”, and near zero slop (semi-vertical slope) refrigerants are called “isentropic fluids” (Jockenhöfer et al., 2018). Fig. 2 compares between three different refrigerants correspond for each group.

As can be seen that the wet fluids do not require any SH, or very small value, in the outlet of evaporator, while the dry ones need a very high degree of SH to prevent the wet compression. On the other hand, the isentropic fluids need a moderate degree of SH that could be done inside the evaporator without side effects on the system performance.

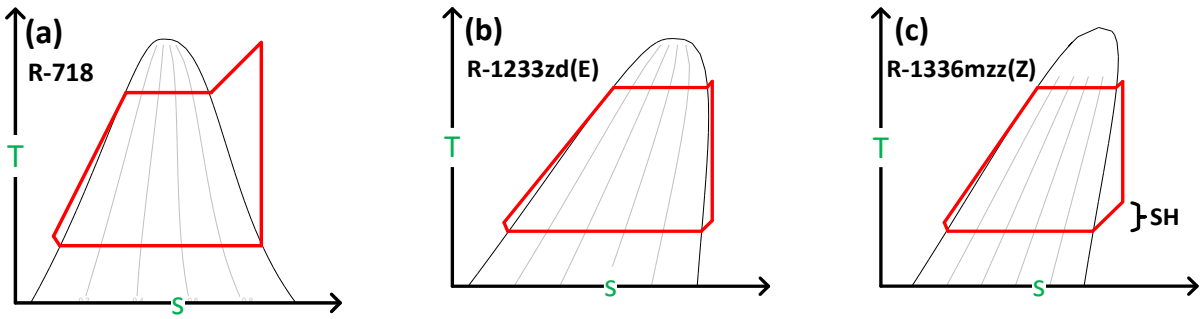

Figure 2: T-s diagram for: (a) R-718 (wet fluid), (b) R-1233zd(E) (isentropic fluid), and (c) R-1336mzz(Z) (dry fluid)

Other desirable criteria of the refrigerants used especially in HT-HPs applications are: zero ozone depletion potential (ODP=0); very low global warming potential (GWP<10); non-toxic; no or low flammability; high critical temperature (T_{crit}>145 °C) allowing for subcritical applications; low critical pressure (P_{crit}<3 MPa). Regarding the criteria discussed, Table 2 lists a sample of different refrigerants that could be employed in HT-HPs applications.

Table 2. Properties of selected refrigerants for HT-HPs (Arpagaus et al., 2018; Klein, 2018)

Group	Refrigerant	Type	T_{crit} (°C)	P_{crit} (MPa)	NBP[a] (°C)	ODP (-)	GWP (-)	SG[b]
Wet (W)	R-718 (water)	Natural	373.95	2.206	100.0	0	0	A1
	Acetone	HC[c]	235.0	4.7	56.0	0	<10	n.a.
Dry (D)	R-1336mzz(Z)	HFO[d]	171.3	2.9	33.4	0	2	A1
	R-365mfc	HFC[e]	186.85	3.266	40.2	0	804	A2
Isentropic (S)	R-1233zd(E)	HCFO[f]	166.5	3.62	18.7	0.0003	<1	A1
	R-245fa	HFC	154.01	3.65	15.1	0	858	B1
	Butene	HC	146.15	4.0	-6.3	0	<10	n.a.

[a]NBP: normal boiling point at 0.1013 MPa; [b]SG: safety group (ASHRAE, 2016); [c]HC: hydrocarbons; [d]HFO: hydrofluoroolefins; [e]HFC: hydrofluorocarbons; [f]HCFO: hydrochlorofluoroolefins.

3. RESULTS AND DISCUSSION

Fig. 3 shows the work ranges for refrigerants listed in Table 2. The work range is defined as the difference between critical temperature (T_{crit}) and normal boiling point (NBP). This gives an idea for the ability of refrigerant to reach a certain condensation temperature (T_{cond}) and its proximity to the critical point. In the present work, the values of T_{cond} range between 123 and 163 °C, as seen in Fig. 3.

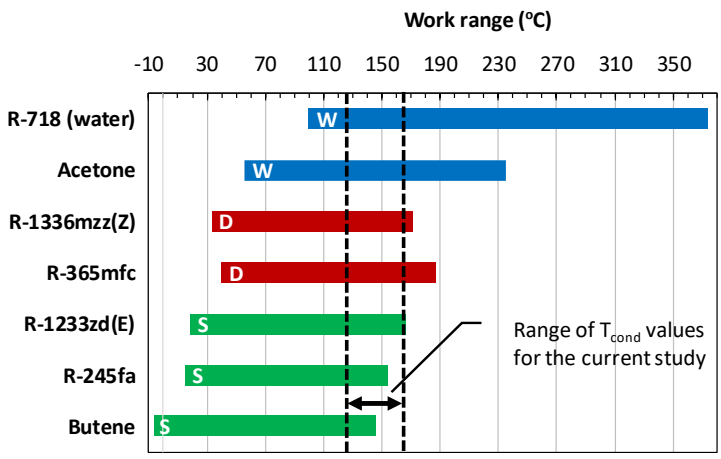

Figure 3: Work ranges for selected refrigerants and condensation temperature (T_{cond}) limits in the current work

Arpagaus et al. (2018) reported that for subcritical HT-HPs, the difference between T_{crit} and T_{cond} should be between 10 and 15 K to ensure a reasonable performance. Regarding this condition, it can be noticed that the R-718 (water), Acetone, and R-365mfc are the only refrigerants that could reach the maximum limit for the T_{cond} in the current work. The water has many desirable properties, such as very high latent heat and T_{crit}; however, because of its low vapor density it requires complicated multi-stage compression cycles with intercooling to cope the high values of pressure ratio and discharge temperature. Such cycles are out of the scope of the present work, so water has been excluded from the analysis.

In all simulations, the inlet water temperature to the evaporator ($T_{wtr,in,evap}$) was fixed at 80 °C, and the water-side temperature difference was set to 3 K. On the other hand, the inlet pressurized water to the subcooler ($T_{wtr,in,subc}$) was always assumed to be 5 K less than the $T_{wtr,in,evap}$. This is because we assume that if the value of $T_{wtr,in,subc}$ is very low and needs to be increased, it will be preheated firstly with the source hot water. A heat source at 80 °C has been chosen as a representative of potential sources of waste heat from solar production or industrial processes, with possible interconnection with district heating.

In the current study, all the SH is assumed to be done inside the evaporator. For wet fluids it was fixed at 1 K, while for isentropic fluids 5 K was set. On the other hand, the SH values for dry fluids were varied in each operating condition to ensure obtaining a minimum superheat value of 5 K at the inlet to the condenser.

Based on inlet conditions and model assumptions (Sub-section 2.1), the HT-HP's performance for the selected refrigerants is compared in Fig. 4. As can be noticed, Figs. 4a and b, that the isentropic fluids R-245fa, R-1233zd(E), and Butene have the highest COP and lowest Pr values compared with others. However, R-1233zd(E) is the only one that can reach a ΔT_{lift} up to 73 K (T_{cond}=156 °C) with reasonable COP, Pr, and T_{dschrg} values of 4.67, 5.68, and 164.3 °C, respectively. Also, it can be noticed that R-245fa has a very similar behaviour compared to R-1233zd(E), with slightly better COPs, till a ΔT_{lift}= 61 K (T_{cond}=144 °C); however, it is not recommended for its high GWP (≈ 858) and toxicity (Class B). Accordingly, R-1233zd(E) is considered to be a potential, environment-friendly, replacement for R-245fa.

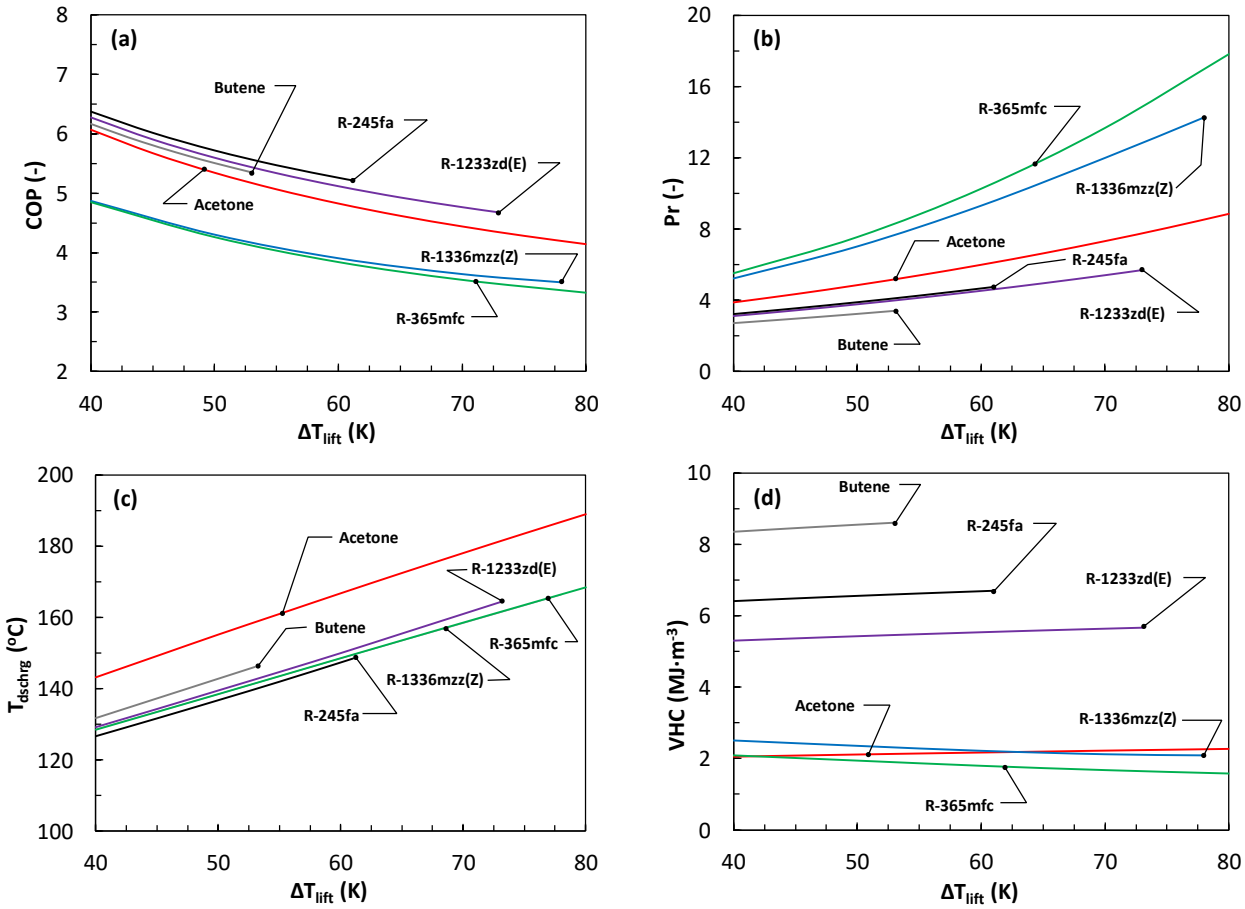

Figure 4: Performance parameters as a function of ΔT_{lift} for the selected refrigerants: (a) COP, (b) Pr, (c) T_{dschrg}, and (d) VHC

The wet fluid Acetone is the only refrigerant that can reach the maximum considered ΔT_{lift} of 80 K (T_{cond}=163 °C) with COP, Pr, and T_{dschrg} values of 4.14, 8.85, and 189 °C, respectively. Although, it clearly has very decent theoretical performance, the authors have not found experimental data in the literature regarding its real performance as refrigerant in this kind of application.
Contrarily, the dry fluids R-1336mzz(Z) and R-365mfc have the lowest COP and highest Pr values compared to other refrigerants. Although, R-365mfc can reach the maximum ΔT_{lift}= 80 K, it has the lowest COP of 3.33 and highest Pr of 17.82. As mentioned before the dry fluids need high SH values to prevent the wet compression. This, in turn, significantly decreases the evaporation temperature (T_{evap}) compared with wet and isentropic fluids. For example, R-365mfc requires SH of 31.6 K at ΔT_{lift} of 80 K. This results to Tevap= 45.4 °C, which is less than T_{evap} for wet and isentropic refrigerants by 26.6 K. Accordingly, for such refrigerants, it should be considered employing an external superheater to avoid such degradation in system performance.
Regarding the VHC, Fig. 4d shows that isentropic fluids have the highest values of VHC compared with others. Within the range of ΔT_{lift} studied, the average values of VHC for Butene, R-245fa, and R-1233zd(E) are 8.48, 6.58, and 5.49 MJ·m^{-3}, respectively. This implies smaller compressor size and lower cost for a given heating capacity. Generally, dry fluids express lower VHC compared to isentropic ones. R-365mfc shows the lowest average VHC (≈ 1.81 MJ·m^{-3}), which is about 67% lower than R-1233zd(E).
As previously indicated in Sub-section 2.1, the subcooler is considered to be a vital component of the system, especially for the applications that require high values of water-side temperature lift. To understand more this concept, Fig. 5 shows the T-s diagram for R-1233zd(E) at ΔT_{lift}= 40 K and water-side temperature profile inside subcooler and condenser (blue dashed line). As can be clearly noticed the small temperature differences and good matching between the refrigerant and water temperature profiles. The minimum temperature difference between the two profiles is 3 K, while the maximum is 9.2 K. The less the temperature differences between the two streams, the less the irreversibilities associated with the infinite heat transfer process. Optimization of subcooling in subcritical cycles leads to very high COPs and shows a great potential for water heating applications with high temperature lifts (Pitarch et al., 2017 and 2019).

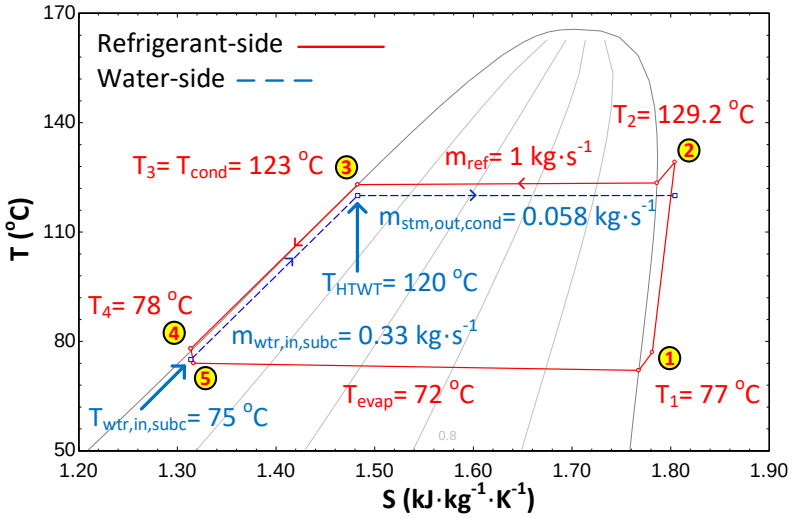

Figure 5: T-s diagram for R-1233zd(E) at ΔT_{lift}= 40 K, corresponds to T_{evap}=72 °C and T_{cond}= 123 °C, with η_s= 0.7, SH= 5K, and ΔT_{pp}=3 K

4. CONCLUSIONS

The thermodynamic performance of a HT-HP was evaluated using different refrigerants, for a ΔT_{lift} ranges between 40 and 80 K. The conclusions are summarized as follows:

- Isentropic refrigerants, R-1233zd(E), R-245fa, and Butene, show the best performance regarding COP, Pr, and VHC compared to dry and wet refrigerants.
- On the other hand, dry refrigerants, R-1336mzz(Z) and R-365mfc, have the lowest performance compared with others. The main reason for this is the high SH required to prevent the wet compression. This significantly decreases the evaporation temperature and,

consequently, the system performance. To prevent the performance degradation, it is very important to employ an external superheater.

- Only R-365mfc and Acetone can reach the maximum considered ΔT_{lift} of 80 K for the selected source temperature of 80 °C. However, the main disadvantages of R-365mfc are the high SH required (up to 31.6 K) to prevent wet compression, Class 2 flammability, and high GWP value of 804. The wet refrigerant Acetone shows a promising theoretical performance, however, there is no sufficient data, in the literature, about its real performance as refrigerant regarding the proposed HT-HP cycles.
- For a ΔT_{lift} up to 73 K, R-1233zd(E) is considered to be the best refrigerant in the current study, regarding thermal performance, environmental impact, and safety classification. R-1233zd(E) reaches ΔT_{lift}= 73 K (T_{cond}=156 °C) with COP, Pr, T_{dschrg}, and VHC values of 4.67, 5.68, 164.3 °C, and 5.66 MJ·m^{-3}.

ACKNOWLEDGEMENTS

Authors acknowledge the financial support provided by the project “ENE2017-83665-C2-1-P” funded by the “Ministerio de Ciencia, Innovación y Universidades” of Spain.

NOMENCLATURE

ΔT_{lift}	temperature lift (K)
ΔT_{pp}	pinch point (K)
COP	coefficient of performance (-)
h	enthalpy (kJ·kg^{-1})
m	mass flow rate (kg·s^{-1})
η_s	isentropic efficiency (-)
P	pressure (MPa)
Pr	pressure ratio (-)
s	entropy (kJ·kg^{-1}·K^{-1})
SC	subcooling (K)
SH	superheat (K)
T	temperature (ºC)
v	specific volume (m^3)
VHC	volumetric heating capacity (MJ·m^{-3})

Subscripts:

HTWT	high-temperature water tank
cond	condenser/condensation
crit	critical
dschrg	discharge
evap	evaporator/evaporation
in	inlet
out	outlet
ref	refrigerant
stm	steam
subc	subcooler
wtr	water

REFERENCES

Arpagaus, C., Bless, F., Uhlmann, M., Schiffmann, J., Bertsch, S.S., 2018. High temperature heat pumps: Market overview, state of the art, research status, refrigerants, and application potentials. Energy 152, 985-1010.

ASHRAE, 2016. Standard 34-safety standard for refrigeration systems and designation and classification of refrigerants.

CHESTER, 2018. Compressed Heat Energy Storage for Energy from Renewable Sources (CHESTER) [WWW Document]. Europian Union’s Horizon 2020 Research and Innovation Programme. URL https://www.chester-project.eu

Fukuda, S., Kondou, C., Takata, N., Koyama, S., 2017. Thermodynamic Analysis on High Temperature Heat Pump Cycles Using Low-GWP Refrigerants for Heat Recovery. Proceedings of the 12th IEA Heat Pump Conference, Rotterdam, Netherlands.

Jockenhöfer, H., Steinmann, W.-D., Bauer, D., 2018. Detailed numerical investigation of a pumped thermal energy storage with low temperature heat integration. Energy 145, 665-676.

Klein, S.A., 2018. Engineering Equation Solver (Version V10.451), F-Chart Software.

Panayiotou, G.P., Bianchi, G., Georgiou, G., Aresti, L., Argyrou, M., Agathokleous, R., Tsamos, K.M., Tassou, S.A., Florides, G., Kalogirou, S., Christodoulides, P., 2017. Preliminary assessment of waste heat potential in major European industries. Energy Procedia 123, 335-345.

Pitarch, M., Hervas-Blasco, E., Navarro-Peris, E., Corberán, J.M., 2019. Exergy analysis on a heat pump working between a heat sink and a heat source of finite heat capacity rate. Int. J. Refrig. 99, 337-350.

Pitarch, M., Hervas-Blasco, E., Navarro-Peris, E., Gonzálvez-Maciá, J., Corberán, J.M., 2017. Evaluation of optimal subcooling in subcritical heat pump systems. Int. J. Refrig. 78, 18-31.

Reißner, F., 2015. Development of a Novel High Temperature Heat Pump System. PhD. thesis, Friedrich-Alexander-Universität Erlangen-Nürnberg, Nuremberg, Germany.