TEKNOLOGISK
INSTITUT

Annex 48 – Industrial Heat Pumps Workshop

14.05.2019 – Tokio

Benjamin Zühlsdorf, bez@DTI.dk, +45 7220 1258

Situation in Denmark

Political treaties and strategies:

- Energy-Strategy (adopted in 2011)
  - By 2050:
    - Independent of fossil fuels
- Energy-Agreement (adopted in 2018)
  - By 2030:
    - 40 % Reduction in GHG emissions
    - 55 % Renewables
    - 33 % Increase in energy efficiency
    - < 10 % fossil fuels in district heating
- Plans for Copenhagen:
  - Carbon neutral by 2025
  - 300 MW heat supply to DH by HPs

Energy system:

- High share of renewables in electricity production:
  - 2017: 65 %
  - Increased share of biomass during last years
- High share of district heating in heat supply:
  - Approximately 65 % of households

→ High potential impact for heat pumps

TEKNOLOGISK
INSTITUT

Situation in Denmark: Industrial HPs

Survey for IEA HPT Annex 48:

- Data on Total (2007 – 2018) 77 120 MW
  Industrial energy recovery 11 8.7 MW
- District Heating 66 111 MW

- List is being updated with more detailed information

Heat pumps at Bjerringbro Energy central, Denmark

TEKNOLOGISK
INSTITUT

Situation in Denmark: Industrial HPs

<u>Heat pumps in district heating:</u>

- Different tools for planning support available
  - Planning guidelines, incl. all required information
  - Structured overview with possible scenarios
  - Catalogue with inspiration and best case examples
  - Calculation tools
- Situation is understood by all involved parties
- Solutions are becoming standardized
- Heat pumps are becoming preferred solution

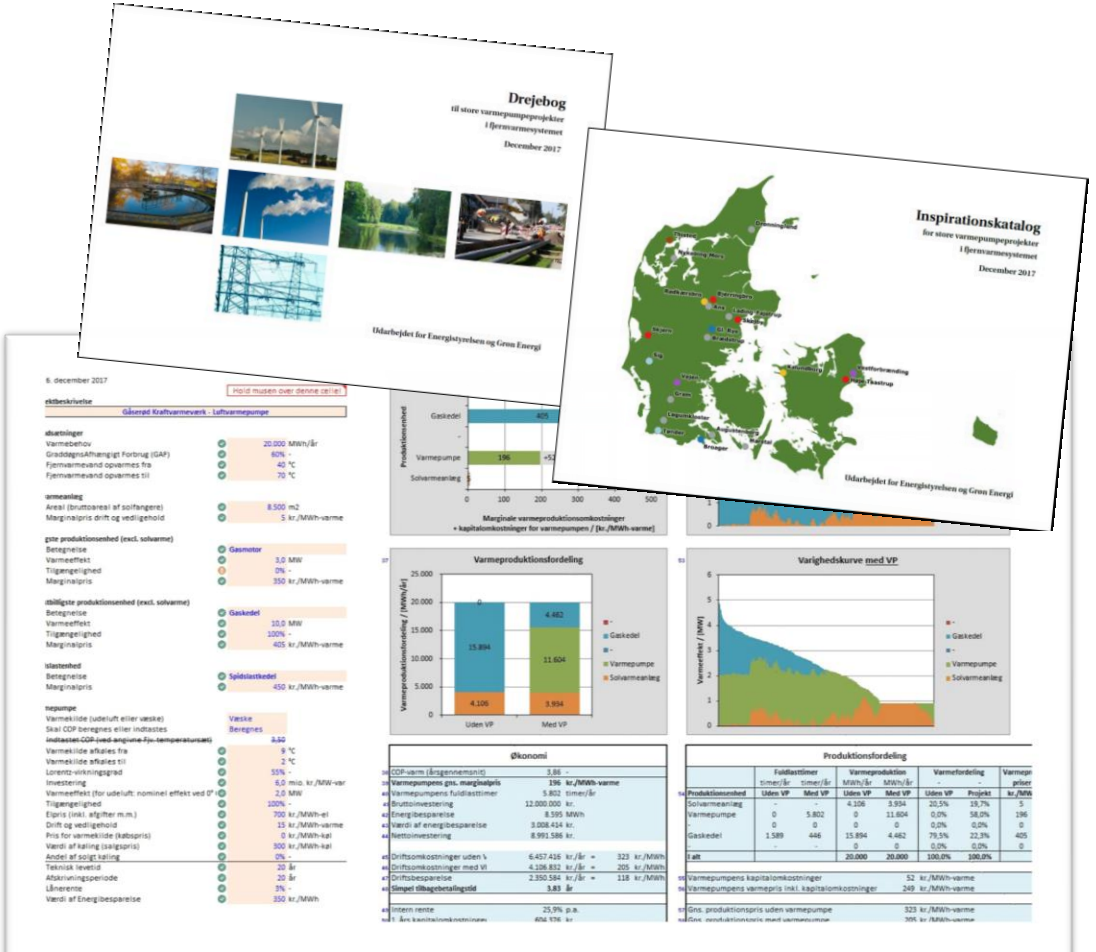

Situation in Denmark: Industrial HPs

<u>Heat pumps in district heating</u>

- Heat pumps are an acknowledged technology in district heating

Focus of developments shifts to:

→ Operational issues

→ Upscaling of technology

→ Exploitation of *secondary* benefits

- Challenges through availability of potential heat sources
  - Waste heat
    - Flue gasses
    - Industrial excess heat
    - Sewage water
    - Data Centers
    - ...
  - Ambient sources
    - Seawater (or alternatively river, lakes, ...)
    - Air
    - Ground
- Potentials
  - Providing ancillary services (flexible heat consumption)

TEKNOLOGISK
INSTITUT

Situation in Denmark: Industrial HPs

Energylab Nordhavn: Smart City Lab

http://www.energylabnordhavn.com/

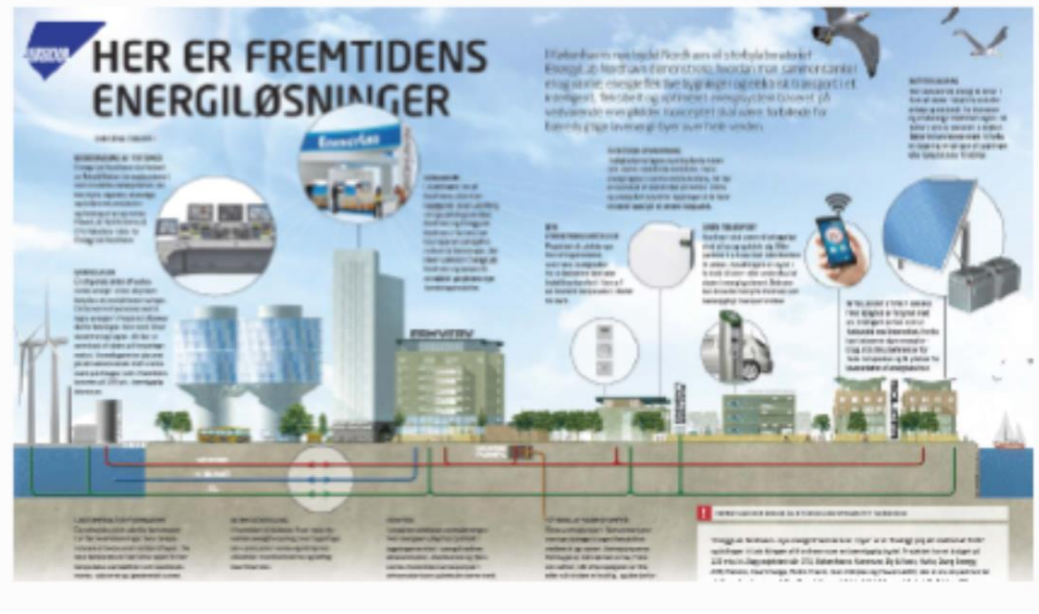

Situation in Denmark: Industrial HPs

Heat pumps in industrial applications

- Boundary conditions are more diverse
- Technologies are less standardized
- Integration often associated with process integration
- Increased effort in engineering
- Energy supply not the main business
- Different economic boundary conditions

- Challenges through increased diversity of boundary conditions
- Potentials and advantages
  - Exploitation of both heating and cooling
  - Reducing cooling utilities often important aspect

TEKNOLOGISK
INSTITUT

Best Case I: SVAF Heat Pump

- Demonstration plant for
  - Analysis if heat sources (Sewage water and seawater)
  - Testing new method of optimizing COP
  - Testing new method for monitoring operation
- Project investment:
  - Overall: 110 Mio. Dkk (≈ 15 Mio. €)
  - Funding: 23 Mio. Dkk (≈ 3 Mio. €)

		Seawater	Sewage water
Source	Temperatures	4 °C → 0.5 °C	10 °C → 4 °C
	Heatflow	3672 kW	3732 kW
Sink	Temperatures	50 °C → 80 °C	
	Heatflow	5194 kW	5177 kW
Power		1635 kW	1552 kW
COP_h		3.2	3.3

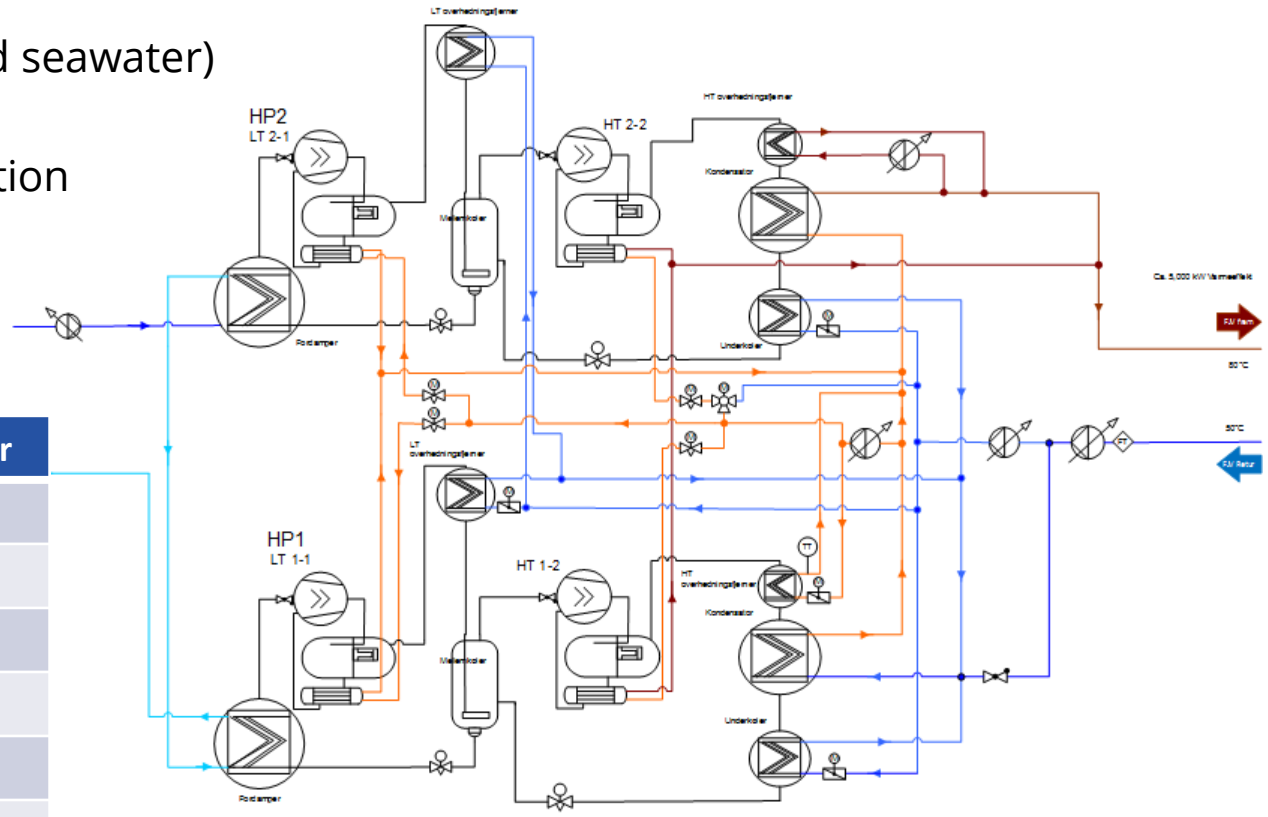

TEKNOLO
INSTITUT

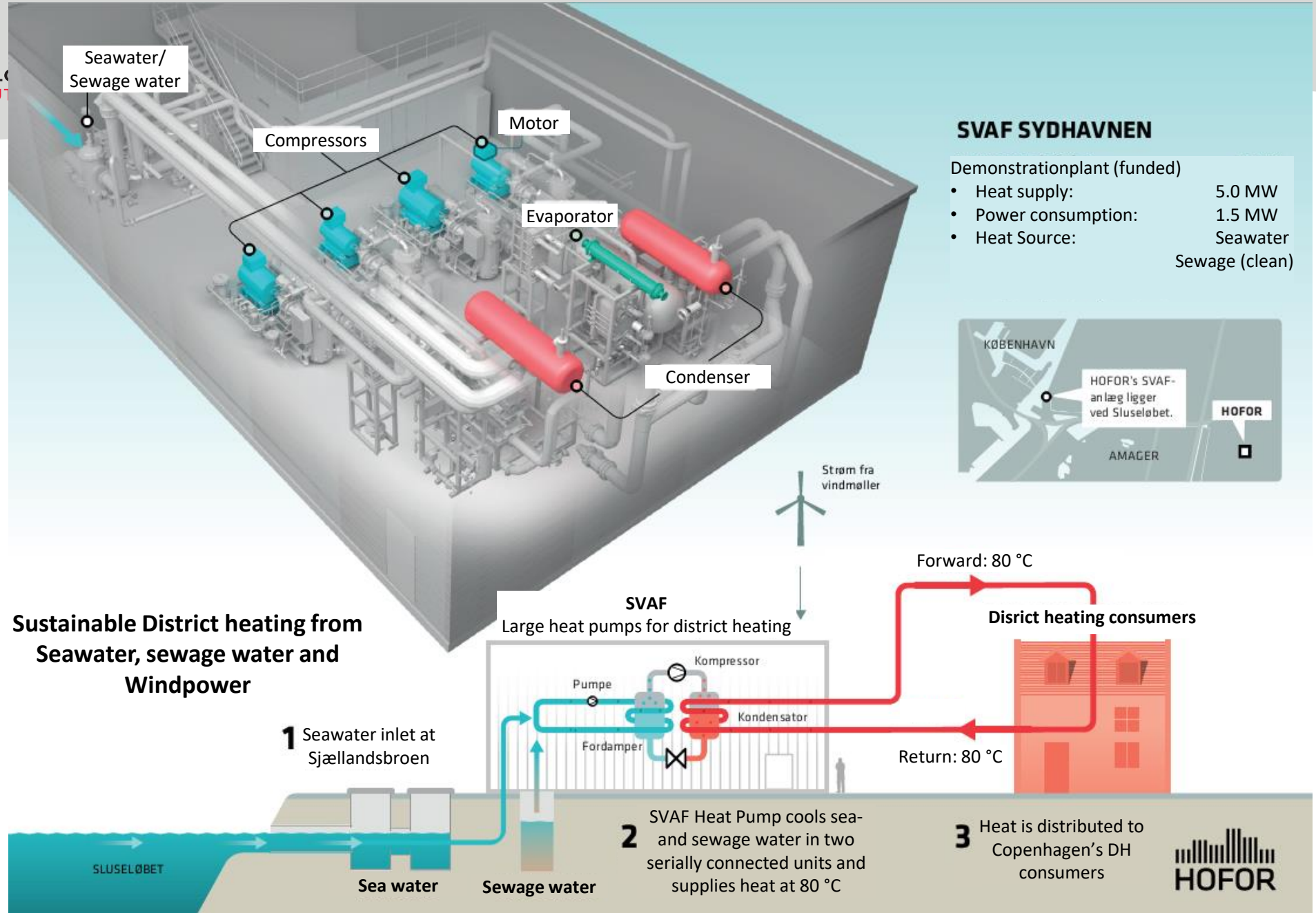

TEKNOLOGISK
INSTITUT

Best Case I: SVAF Heat Pump

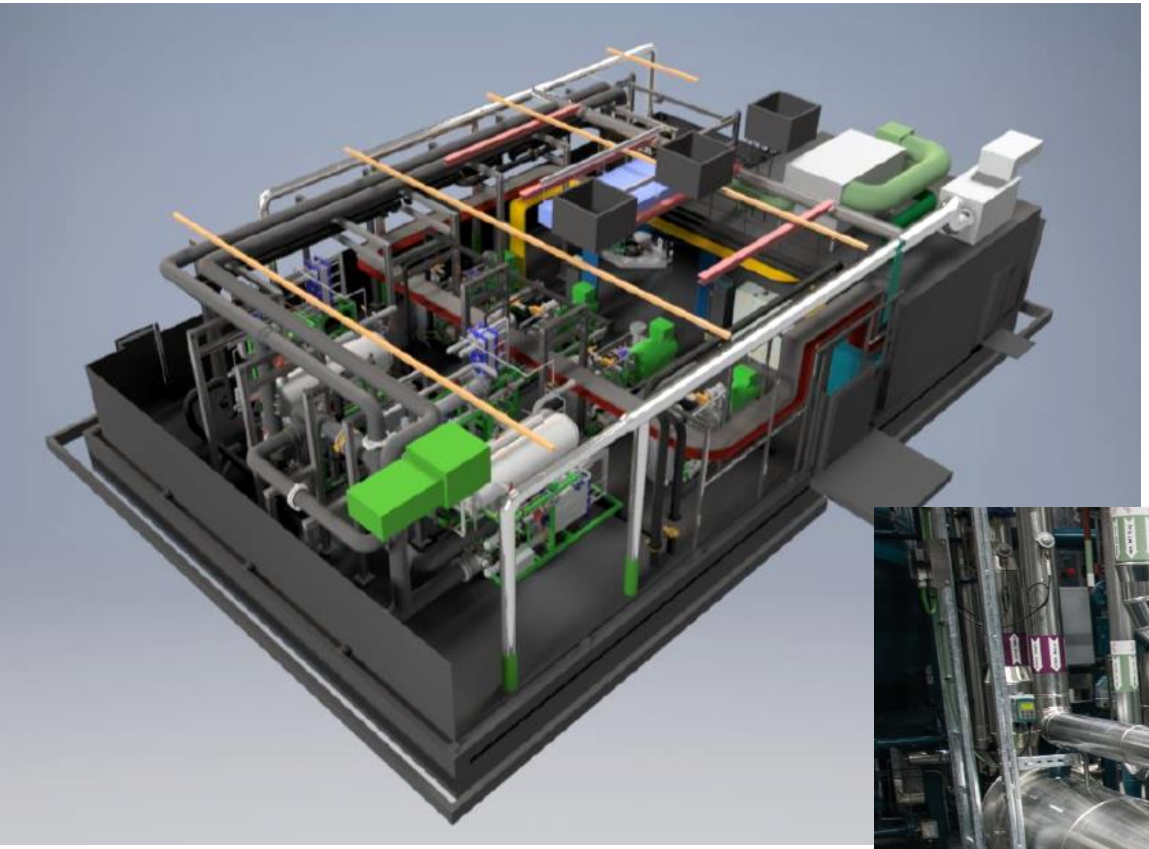

TEKNOLOGISK INSTITUT

viegand maagøe energy people

Best Case II: CP Kelco

Background:

- CP Kelco produces ingredients for the food sector → High cooling loads
- 2014: Energy symbiosis of VEKS (Utility company), CP Kelco, Sun Chemical, Fef Chemicals and Junckers
- Expansion of DH network to Køge region

Key factors for project realization:

- Expansion of DH network
- Availability of excess heat
- Strong interest from CP Kelco and VEKS
- Energy saving subsidy
- Government support
- Availability of similar business cases

TEKNOLOGISK INSTITUT

viegand maagøe
energy people

Best Case II: CP Kelco

Technology

System level
- Energy symbiosis Køge
- Cooling towers
- Heat recovery system
- Buffer systems
- System efficiency

Production level
- Integration with existing system
- HX redesign
- Piping
- Securing redundancy

District heating
- Expansion of network
- Demand (temperature and loads)
- Ownership
- Agreement between VEKS and CP Kelco

Technology
- Heat pump
- Heat storage
- HX equipment

Partners

Authorities
- Municipality
- Applications for dispensation and construction
- Danish Working Environment Authority

Client (CP Kelco)
- In house engineering
- Maintenance
- Production
- Procurement
- Management
- EHS

District heating
- Management
- In house engineering
- Subcontractors

Suppliers
- Mechanical
- Electrical
- Building
- Civil
- **HEAT PUMP**

TEKNOLOGISK INSTITUT

viegand maagøe
energy people

Best Case II: CP Kelco

Power	Energy	System COP
4-7 MJ/s	140 TJ/year (38,700 MWh/year)	**18.5**

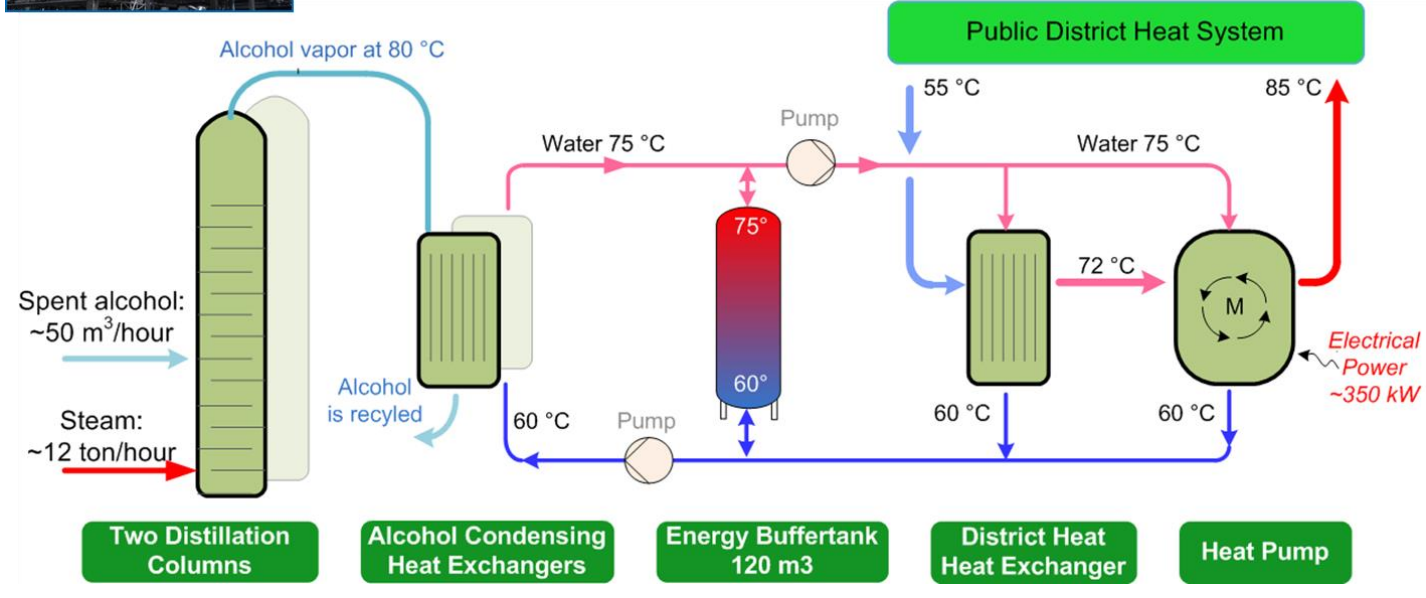

Key figures:

- System COP > 80
- After system design
- maximum district heating effect 8.7 MW (Business case 5 MW)
- Averages district heating effect 6.9 MW
- Expected district heating production of 55 GWh (Business case 40 GWh)
- Covering the heating demand in the Køge region approx. 5-6 month per year

Conclusions

- Ongoing transition of the Danish Energy system
- High share of renewables in electricity production → high potential for electrification of heat supply
- HPs are (becoming) an established solution and the preferred choice for supply in district heating → Good knowledge base for HPs in DH available
- Industrial applications are more diverse → Guidelines for integrating HPs (technically and in project handling)
- Two cases of successful implementations were shown and experiences outlined